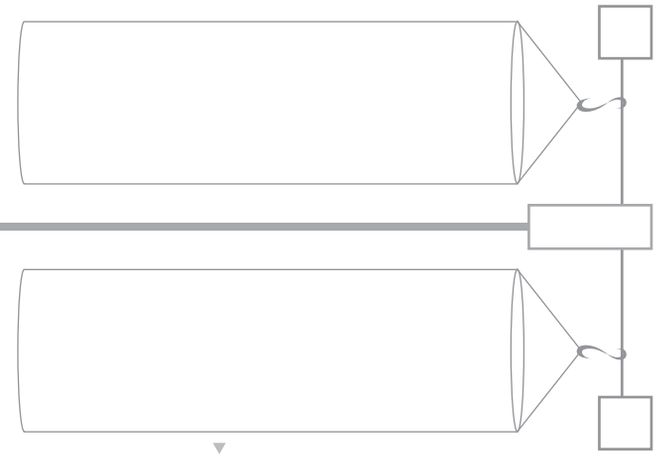

Re-feel net No.012

Re-feel net No.012

Re-feel net No.012

Re-feel net No.012