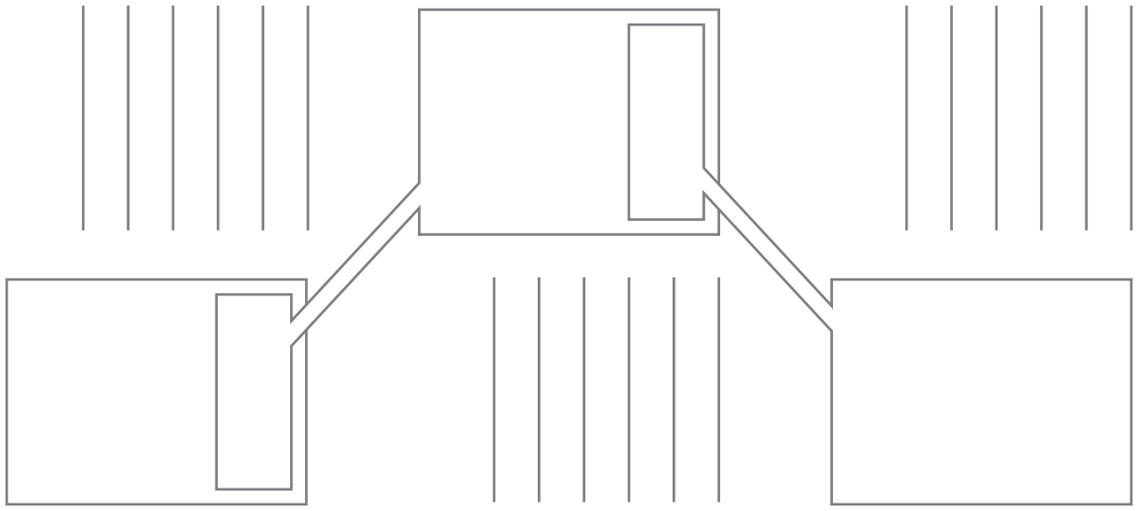

Re-feel J-net No.101

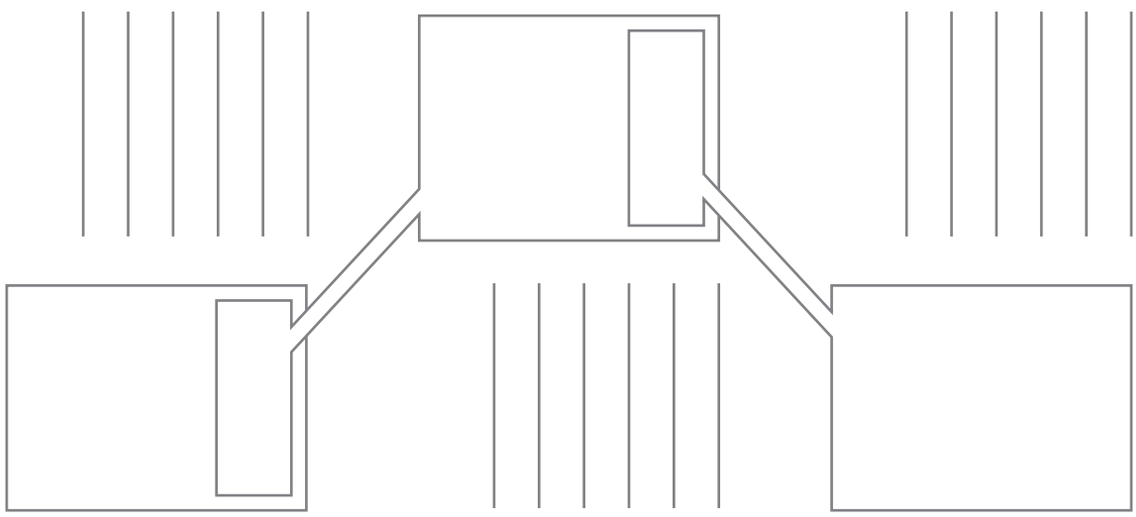

Re-feel J-net No.101

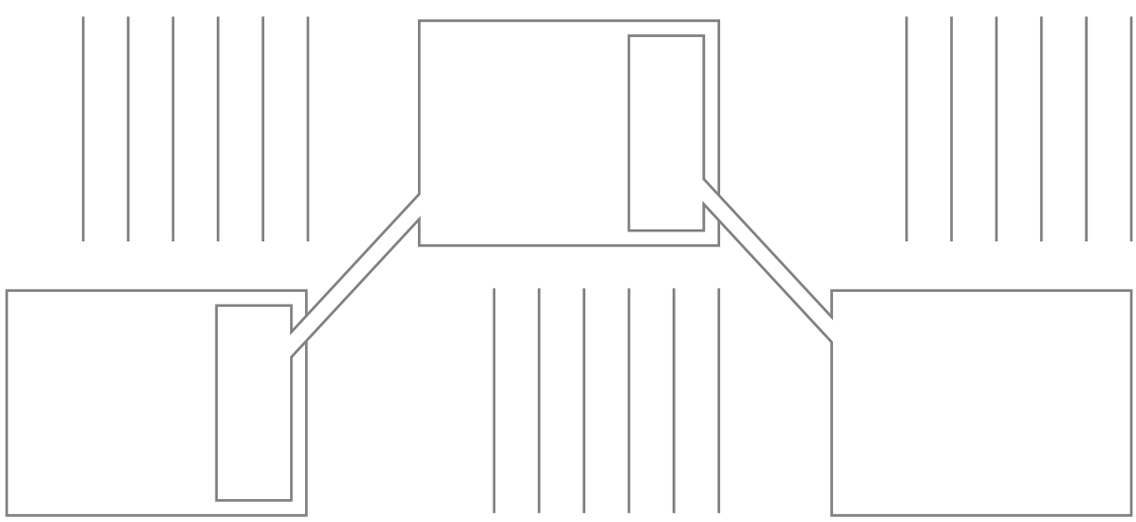

Re-feel J-net No.101